Date Printed: 04/23/2009

JTS Box Number: IFES_71

Tab Number: 18

Document Title: Convenor's Presentation Kit

Document Date: 1992

Document Country: Philippines

Document Language: English

IFES ID: CE01628

MANILA MANAGEMENT CONSULTING GROUP, INC.

EDDIE M. NUQUE
President

Ramon Magsaysay Center, 1680 Roxas Boulevard, Manila
Tel. Nos.: 58-54-14/ 59-71-15 • Fax No.: 521-10-12 / 59-71-15

CONVENOR'S
PRESENTATION KIT

INTRODUCTION

- FILIPINO ASPIRATIONS
- ACHIEVABLE
- 1992 ELECTIONS: AN OPPORTUNITY

MAGNITUDE OF CHALLENGE

- 31 M, 165,000 PCTS
- 110,000 BEI SHORTAGE
- 17,194 POSITIONS; 70,000 CANDIDATES
- PLURALITY NOT MAJORITY

ILLUSTRATION

POSITION CONTESTED : CONGRESSMAN

NO. OF CANDIDATES : 4

NO. OF VOTERS : 70,000

NO. OF VOTES CAST : 56,000 OR 80%

CANDIDATE A	:	8,400	15%
B	:	14,000	25%
C	:	16,700	29.82%
D	:	16,900	30.17%

WINNER: CANDIDATE D WITH 200 VOTES PLURALITY

1992: A TOTAL EFFORT

- BEI
- POLLWATCH
- TEACHERS
- VOTERS ASSISTANCE
- CANDIDATE FORA
- CODE OF CONDUCT
- VOTER EDUCATION
- BARANGAY WATCH, VOTERS LIST
- PNP/AFP
- MEDIA - CITIZENS QUICK COUNT

DEVELOPMENTS

- COMELEC

- OTHER INITIATIVES;
  PARISH PASTORAL COUNCIL;
  EARTH VOTE;
  PEACE VOTE

BANGLADESH

CHILE

NEPAL

CAMBODIA

COTABATO

CEBU

STRATEGIES

I EDUCATION AND TRAINING

1. VOTER EMPOWERMENT PART I, (NEM I) — MOTIVATION FOR RECRUITMENT OF VOLUNTEERS

2. TRAINING VOLUNTEERS FOR ELECTION DAY (NEM II) — SKILLS BLDG.
    a. V.A.C.
    b. P.W.
    c. O.Q.C.

3. PROMOTING MUTUAL TRUST & UNDERSTANDING (NEM III) — SUPPORT BLDG.
    a. AFP/PNP/CITIZENS
    b. TEACHERS/CITIZENS
    c. POL. PARTIES/CITIZENS

4. VOTER EMPOWERMENT PART 2 (NEM IV) — CONTINUING APPLICATION OF NAMFREL TECHNOLOGY
    - RECALL, INITIATIVES AND REFERENDUM
    - ELECTORAL REFORMS

MISSION: 1992 ELECTIONS: THE IMPETUS TO STRENGTHEN THE DEMOCRATIC PROCESSES FOR ECONOMIC GROWTH AND A BETTER QUALITY OF LIFE FOR THE FILIPINO.

KEY RESULTS:

1. WELL INFORMED ELECTORATE I.E. MEDIA AND VOTER EDUCATION.

2. GREATER CITIZEN INVOLVEMENT IN THE ELECTORAL PROCESS.

3. ACHIEVE MUTUAL UNDERSTANDING OF THE ROLE AND RESPONSIBILITIES OF ALL KEY PLAYERS IN THE ELECTORAL PROCESS IN ENSURING AN HONEST, CLEAN, PEACEFUL, ORDERLY AND MEANINGFUL ELECTION.

4. A CREDIBLE QUICK COUNT.

5. FULL DOCUMENTATION OF SYSTEMS, PROCEDURES AND OUTCOMES FOR FUTURE ELECTIONS.

II P.I.O. = COMMUNICATIONS STRATEGY

INFORMATION

a. HOW TO ORGANIZE

b. CONGRESSWATCH

c. CANDIDATE-FORA

d. BEI

e. CODE OF CONDUCT

f. VOTERS LIST

g. TEACHERS

h. VOTERS CHECKLIST GUIDE

III MOBILIZATION

CONCLUSION

1992 ELECTIONS: A TOTAL EFFORT

- 3 FOCUS AREAS
  1. VOTER EDUCATION
     - VARIOUS ADVOCACIES
     - RULES OF THE GAME

2. PARTICIPATE IN THE ELECTION PROCESS

- o BEI VOLUNTEER
- o POLLWATCHING
- o VOTERS ASSISTANCE DESKS
- o CODE OF CONDUCT FOR POLITICIANS
- o VOTERS LIST CLEAN UP

3. "COUNT THAT VOTE"

THANK YOU
AND
GOD BLESS US ALL

CONVENOR'S
PRESENTATION KIT

MEDIA-CITIZENS QUICK COUNT

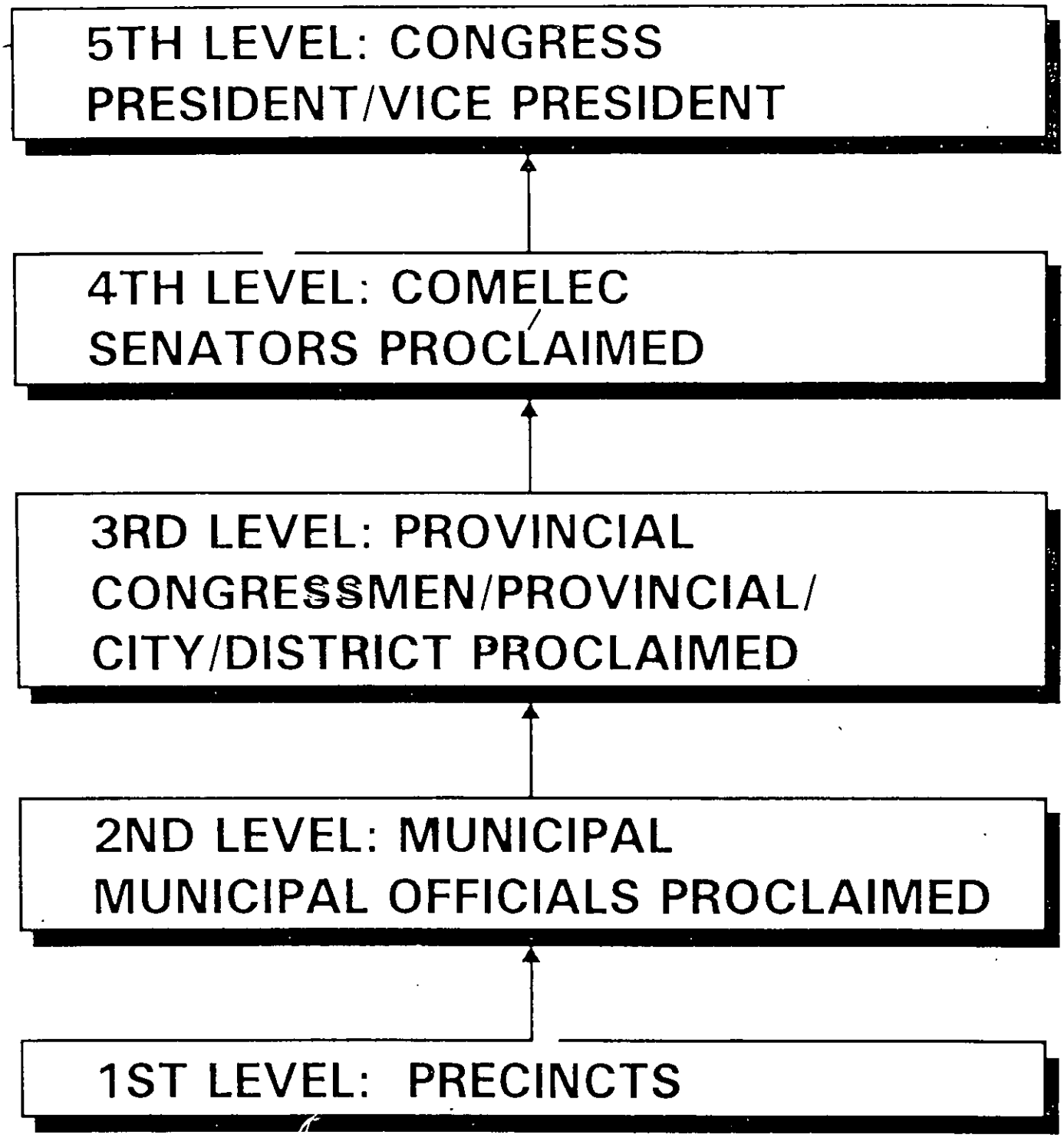

LEVELS OF COUNTING

MEDIA-CITIZENS QUICK COUNT
GOVERNING COUNCIL

MEDIA

1. EUGENIO LOPEZ, ABS-CBN
2. RAUL LOCSIN, BUSINESS WORLD
3. TEDDY BOY LOCSIN, DAILYGLOBE
4. ANDRE KAHN, KBP
5. LEONILO CLAUDIO, PPI
6. ZACARIAS NUGUID, PPI

CITIZENS

1. CESAR VIRATA, FORMER PRIME MINISTER
2. JOSE FERIA, NAMFREL
3. CAROLINA HERNANDEZ, UP
4. FIL ALFONSO, PRESIDENT, ASIAN INSTITUTE OF MANAGEMENT
5. RAMON SY, BANKING SECTOR

WHY A QUICK COUNT?

- 48 HOURS
- INFORM THE PUBLIC
- PREVENT FRAUD

MEDIA-CITIZENS QUICK COUNT

- IMPORTANCE OF EACH VOTE
- SUCCESS STORIES

VOLUNTEER IN ANY:

- DATA GATHERING
- DATA VERIFICATION
- DATA TRANSMISSION
- DATA PROCESSING
- DATA DISSEMINATION

MEDIA CITIZENS QUICK COUNT

CIRCULAR NO. 1

A This circular contains the following:

1. Brief on the Media Citizens Quick Count (MCQC)
2. MCQC Provincial Chapter Form
3. MCQC Municipal/City Chapter Form
4. Copy of COMELEC Accreditation for MCQC

B. HIGHLIGHTS OF THE MCQC BRIEF

1. MCQC was accredited by the COMELEC on February 18, 1992 as the only organization authorized to conduct a quick count.

2. MCQC was organized in response to the New Election Code that the Quick Count should be media-based.

3. MCQC will have the 4th copy of the Certificate of Canvass of the city/municipal board of canvassers.

4. MCQC will be provided access to the 5th copy of the election returns coming from the different precincts.

5. Guidelines for organizing chapters in the provincial/city/municipal level are provided for.

/maan

March 13, 1992

BRIEF ON MEDIA-CITIZENS QUICK COUNT (MCQC)

I. BACKGROUND

Pursuant to the provision of the New Election Code that the Election Quick Count should be media-based, a group of publishers together with volunteer citizen groups established the Media Citizens Quick Count (MCQC) to guarantee free, honest and peaceful elections on May 11. After a hearing conducted by the Commission on Elections, the MCQC was accredited as the only organization authorized to conduct a quick count. Please refer to the attached copy of the COMELEC accreditation.

II. ORGANIZATION

The MCQC is headed by a Governing Council composed of the following from Media:

EUGENIO LOPEZ, JR. Chairman	Philippine Press Institute ABS-CBN
RAUL LOCSIN Vice Chairman	Philippine Press Institute Business Day
TEODORO LOCSIN, JR.	Philippine Press Institute
ZACARIAS NOGUID Provincial Press	Philippine Press Institute
NILO CLAUDIO President	Philippine Press Institute
MIKE ENRIQUEZ President	Kapisanan ng mga Brodkaster sa Pilipinas

Their citizen counterparts are:

CESAR VIRATA	Former Prime Minister
CAROLINA HERNANDEZ	UP Professor
OCTAVIO ESPIRITU	Far East Bank
WILLY TECSON	Solidbank
JOSE FERIA	NAMFREL Chairman
FIL ALFONSO	Asian Inst. of Management

On their own initiative, the members of the Council have taken the step of entering into a covenant that they will not accept any government position for at least two years after the election, and that none of them will be involved in activities that would be partisan.

The guiding Rule of the Council is to guarantee a credible quick count regardless of who emerges as winner. The publishers donated the seed money to make MCQC operational. A public fund campaign will soon be launched thru the media to support the entire MCQC project.

III. GUIDELINES FOR ORGANIZING CHAPTERS

Citizens arms accredited by the COMELEC are normally expected to do the following among others.

a) Voter Education
b) Pollwatching
c) Voter Assistance

On the quick count, COMELEC has accredited MCQC, which authorizes it to secure copies of the advance election returns and the 4th copy of the certificate of canvass.

Therefore, a distinct MCQC organization by province, city and municipality should be organized composed of media and citizen representatives.

Generally speaking, the citizens representatives come from the ranks of the local citizens arm itself.

In other words, on election day, a situation may arise wherein a volunteer may have two identification cards. He will carry a PPCRV or NAMFREL identification if he is undertaking pollwatching and voters assistance. He will also have a second ID from MCQC if he will participate in the quick count.

IV. PROVINCIAL MCQC COMMITTEE

[illegible] Based [illegible] law, a media-based citizen group [illegible] suggested [illegible] core group is as follows:

2	representatives from the print media
1	from TV.
1	from Radio
1	from citizen arm
1	from PICPA or Accounting outfit
1	from Computer association or school
1	from a communication outfit

The provincial MCQC committee shall organize the municipal and city chapters within the province. It may also operate a tabulation center for the governator al race

V. MUNICIPAL/CITY CHAPTER

On the municipal or city level, an operating team shall be organized composed of:

1 Chairman
1 Verifier
4 Tabulators
1 Transmittor
1 Courier

This set-up would be typical for a town of 50 precincts and may be expanded proportionately with the number of precincts.

One person may handle one or more positions eg. Chairman-Transmittor could be handled by a media volunteer. Moreover, positions may be occupied by either citizen or media people.

One of the principal tasks of the Municipal MCQC Chapter is to organize volunteers who will be properly screened and trained by the MCQC in time for the May 11 elections.

On the strength of a new authority granted by the Commission on Elections, MCQC may now dispatch people from the Urban centers to the various municipalities. This means that MCQC personnel working on the municipal level need not be residents of the municipality.

V. LINKAGE WITH OTHER GROUPS

Based on the decision of the MCQC Governing Council, the MCQC will concentrate on its legally mandated function of securing the 4th copy of the certificate of canvass. This means that MCQC will basically organize down to municipal level only. Only in areas where there are enough volunteers, precinct volunteers may be organized also.

At the precinct level, all groups such as the PPCRV, will be encouraged to conduct their own precinct monitoring. Their data will be transmitted to MCQC for use of various media and for validation of MCQC's municipal-based count.

VI. RECOMMENDED ACTION/STEPS

1. With the assistance of a MCQC field director, the provincial convenor or the local Bishop is requested to hold a meeting with a core group for the purpose of organizing the Provincial MCQC Committee.

2. The composition of the Provincial Chapter is decided making sure that media is represented, officers are selected, and committees are formed. Suggested committees are as follows:

    a) a Tabulation Committee
    b) an Organizing Committee for Municipalities
    c) a Finance and Logistics Committee
    d) a Training Committee
    e) a Recruitment Committee for enlisting volunteers

    For a city, similar committees are formed, persons in-charge of schools or polling places are named.

3. Schedule an assembly for the province to include municipal delegates and trainors for purposes of briefings on MCQC. Pollwatching and Voters' Assitance may also be conducted by NAMFREL at the same meeting.

    Whenever possible, this meeting or seminar will be done to cover a group of provinces or an entire region. MCQC headquarters should be advised about said training scheduled at least one week ahead so it can send a resource person. Please use the attached form.

4. Municipal trainors are expected to schedule and conduct similar trainings for their respective school and precinct volunteers. They will be provided with trainor's kits and other materials.

5. MCQC IDs will be made available to the provincial MCQC chairman or bishop or social action directors as the case may be. They will be responsible for issuing the MCQC IDs to all MCQC volunteers within their respective areas.

6. MCQC headquarters need urgently the following information from provincial, city and municipal chapters:

    a) Names of at least 2 MCQC volunteers designated to receive 4th copy of the Certificate of Canvass.

b) Communication facilities for each municipality to National Tabulation Center (Greenhills)

c) Shipping deatails

Kindly submit the accomplished forms before March 15 so that proper arrangements could be done at the National Tabulation Center at the MCQC Headquarters.

MCQC HEADQUARTERS

Please see the attached MCQC Organizational chart. This will help determine whom to contact to answer your needs or questions.

Our address:

MEDIA CITIZENS QUICK COUNT
Caritas Manila
2002 Jesus St.
Pandacan, Manila
Tel. nos. 521-13-39
521-61-16
521-60-27
521-60-82
522-49-10

/maan

ref: 12\qcbrief

MCGC PROVINCIAL CHAPTER

Province of _____

Date

1. COMPOSITION:

1.1 Chairman/Co-Chairman _____

1.2 Tri-Media members _____

1 print _____

1 radio _____

1 TV _____

1.3 Citizens members _____

2 Accredited citizen org _____

1 PTCA representative _____

1 Computer assoc./school representative _____

1 Communication representative _____

2. COMMITTEES:

2.1 Finance and Logistics _____

2.2 Tabulation committee _____

2.3 Organizers for municipalities _____

2.4 Training committee _____

2.5 Recruitment for municipal volunteers _____

2.6 Communications _____

3. MAILING OR SHIPPING ADDRESS

Name : _____

Address : _____

Tel. no. : _____

Fax no. : _____

/caan

ref: 4thchapter2

NCDC MUNICIPAL/CITY CHAPTER

Municipality/City: _____

Province of: _____

I. OFFICERS

	Name	Position	Address	Tel. no.
1.				
2.				
3.				
4.				
5.				
6.				
7.				
8.				
9.				
10.				

II. Two NCDC volunteers (up to 10 volunteers per city) designated to collect 5th copy of election returns, 4th copy of municipal canvass and send quick count data to NMO

	Name	Organization	Address	Tel/Fax no
1.				
2.				

III. TRAINING PLAN

1. Scope: / / Quick Count / / Pollwatching / / Voters' Assistance
2. Preferred dates of Training: a) _____ b) _____
3. Expected number of participants: _____ (5-10 per municipality)
4. Area coverage: _____ No. of Municipalities: _____
5. Venue: _____
6. Organizers:

	Name	Address	Tel. no.
a)			
b)			

IV. Preferred mode of COMMUNICATING quick count data (Telex, Telephone, Telegraph, Fax, Radio, others)

1st choice: _____
2nd choice: _____
3rd choice: _____

V. SHIPPING DETAILS (for NCDC forms, IDs, etc.)

Name : _____
Address : _____
Preferred mode of transport: _____

Republic of the Philippines
COMMISSION ON ELECTIONS
Manila

EN BANC

IN THE MATTER OF THE PETITION FOR ACCREDITATION AS CITIZEN ARM OF THE COMMISSION,

MEDIA-CITIZENS QUICK COUNT (MCQC),

Petitioner.

x - - - - - - - - - - - - - - - - - - x

SPP NO. 92-014

Promulgated:

February 18, 1992

R E S O L U T I O N

This is a verified petition filed by the Media-Citizens Quick Count (MCQC) on January 22, 1992 seeking accreditation on a nationwide basis as the citizens arm to conduct a media-based unofficial count to be designated by the Commission on Elections to conduct a clean, honest, peaceful, orderly and credible elections.

During the hearing of February 11, 1992, at the Session Hall of the Commission on Elections, no oppositor appeared and no opposition has been filed. Petitioner presented as witness in support of its petition, Mr. Eugenio M. Lopez, Jr. who testified among others the range of the membership of the organization, the funding and its officers. To support further its petition, the following documentary evidences were submitted:

Exhibit "A"	-	Petition
Exhibit "B"	-	A copy of the Media Citizens Quick Count Form
Exhibit "C" "D" and "E"	-	Copy of the Document and Work Flow

Mr. Augusto C. Lagman illustrated to the Commission the "Document and Work Flow" of the organization.

Meanwhile, the testimony of another witness, Eddie Nuque, was dispensed with as being corroborative.

After assessing the evidence presented by petitioner, the Commission finds that petitioner has met the evidence required for accreditation as contained in Rule 33 of the Comelec Rules of Procedure and Comelec Resolution No. 2355, promulgated on 23 January 1992.

WHEREFORE, this Commission hereby GRANTS the petition of Media-Citizens Quick Count (MCQC) for accreditation as its citizens arm for purposes of the local and national elections on May 11, 1992 pursuant to Section 2(5) of Article IX(c) of the Constitution and Section 52(k) of the Omnibus Election Code and other election laws and subject to the conditions set forth in Comelec Resolution No. 2355 promulgated January 23, 1992 of this Commission and to the additional conditions as follows:

1. That all its officers and members who are candidates or engaged in partisan political activities, shall submit immediately to the Commission copies of their unconditional resignation from the Media-Citizens Quick Count (MCQC), and all participating organizations which are similarly engaged in partisan political activities, shall be dropped automatically from the organization, furnishing the Commission within three (3) days a complete list of participating organizations dropped and retained, together with an audited financial report of contributions received and funds disbursed within one (1) month after the elections;

2. That they make a presentation of their systems and procedures of quick count and the whole program to all major political parties as may hereafter be required by the Comelec before the elections for purposes of transparency;

3. That they must conduct a media-based unofficial quick count on a national scale using for this purpose the fourth copy of

the certificate of canvass of the city/municipal boards of canvassers. For the same purpose, the city/municipal treasurer will provide to MCCC access to the fifth copy of the election returns coming from the different precincts.

4. That should there be an advance unofficial count based on the results coming from the precincts, such count must be based on a pre-determined percentage of all areas all over the country.

SO ORDERED.

CHRISTIAN S. MONSOD
Chairman
Presiding

HAYDEE B. YORAC
Commissioner

DARIO C. RIMA
Commissioner

MAGDARA B. DIMAAMPAO
Commissioner

REGALADO E. MAAMBONG
Commissioner

VICENTE B. DE LIMA
Commissioner

REMEDIOS S. FERNANDO
Commissioner

MCQC NATIONAL ORGANIZATION

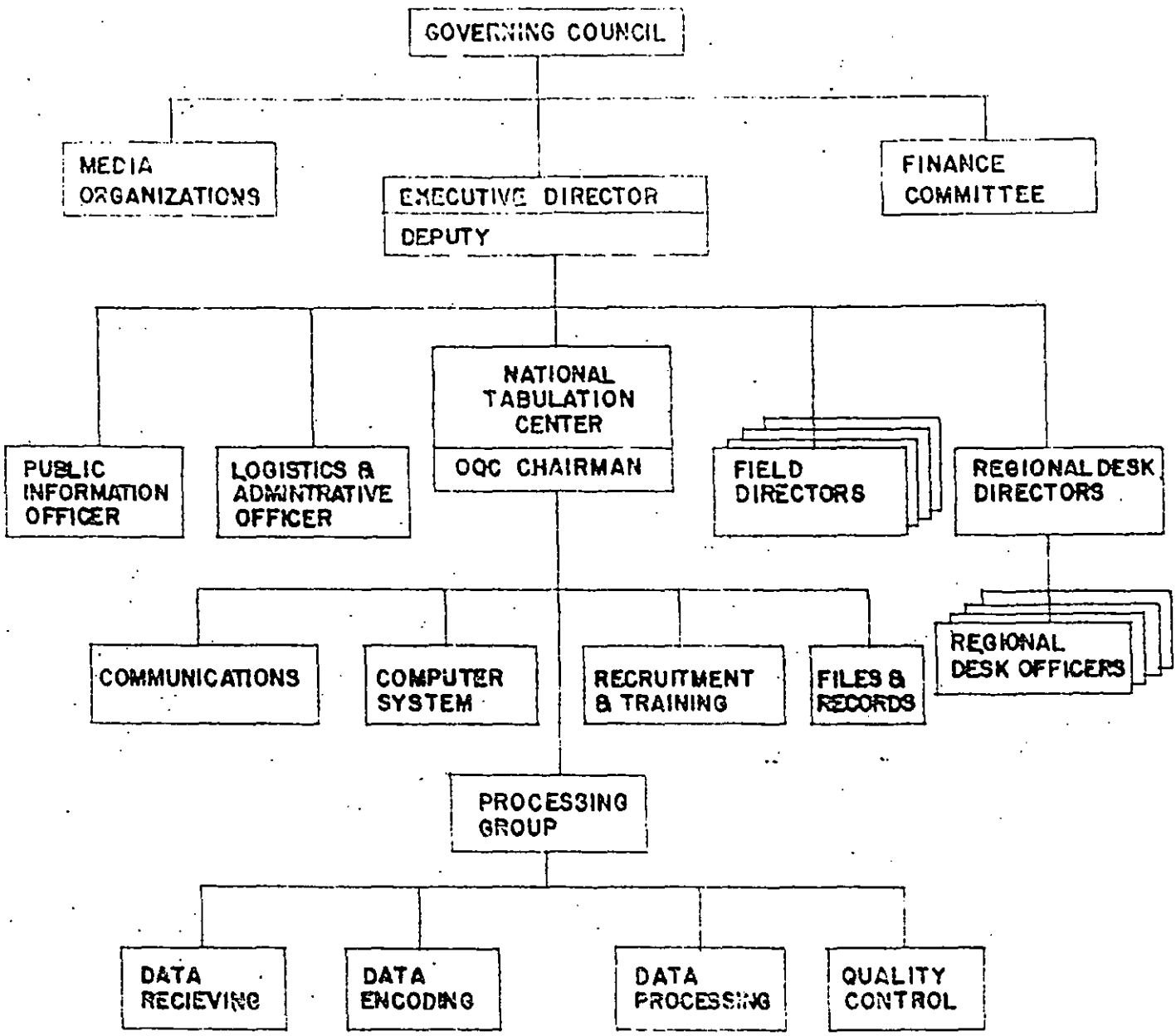

MCQC PROVINCIAL ORGANIZATION

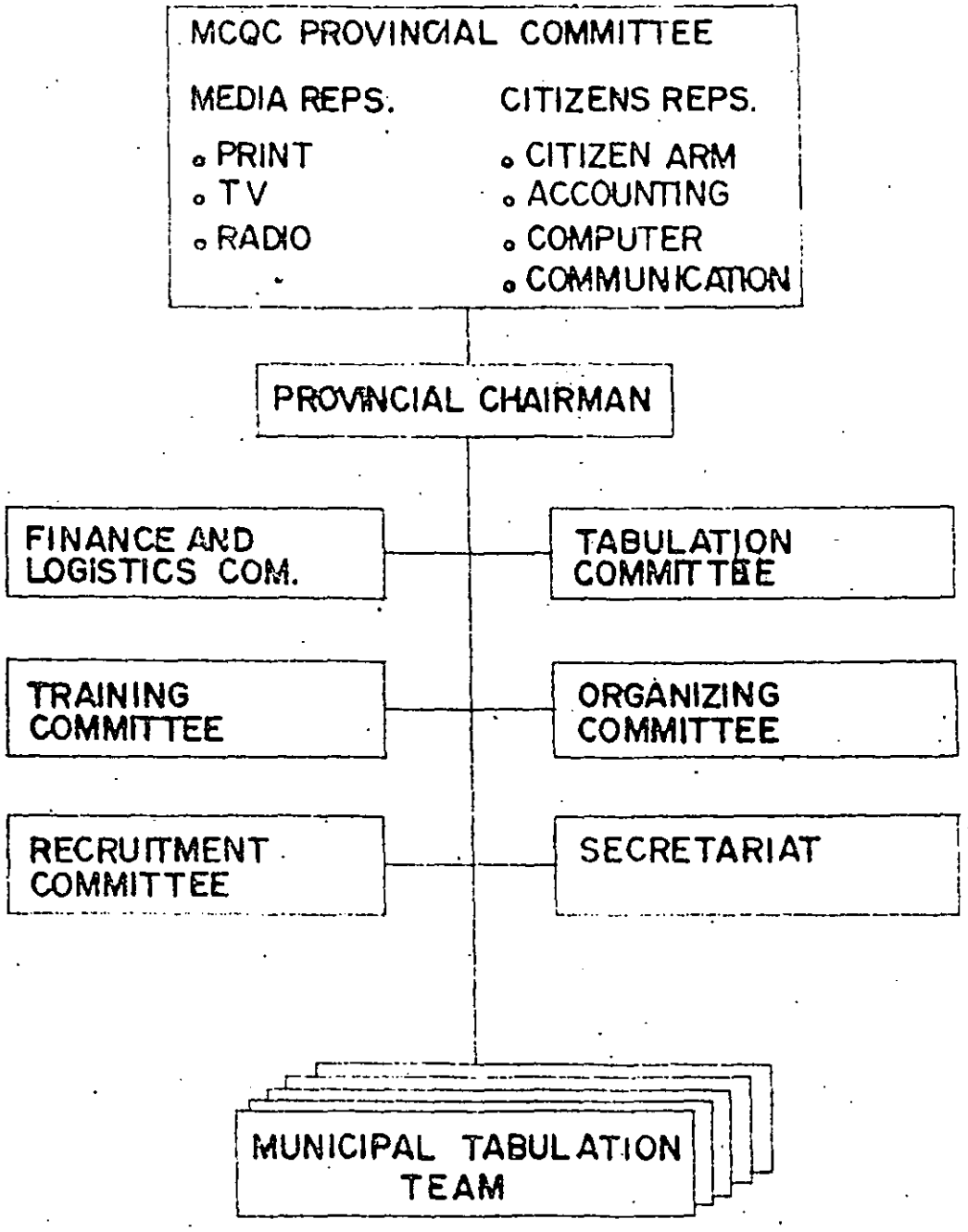

MCOC MUNICIPAL TABULATION TEAM

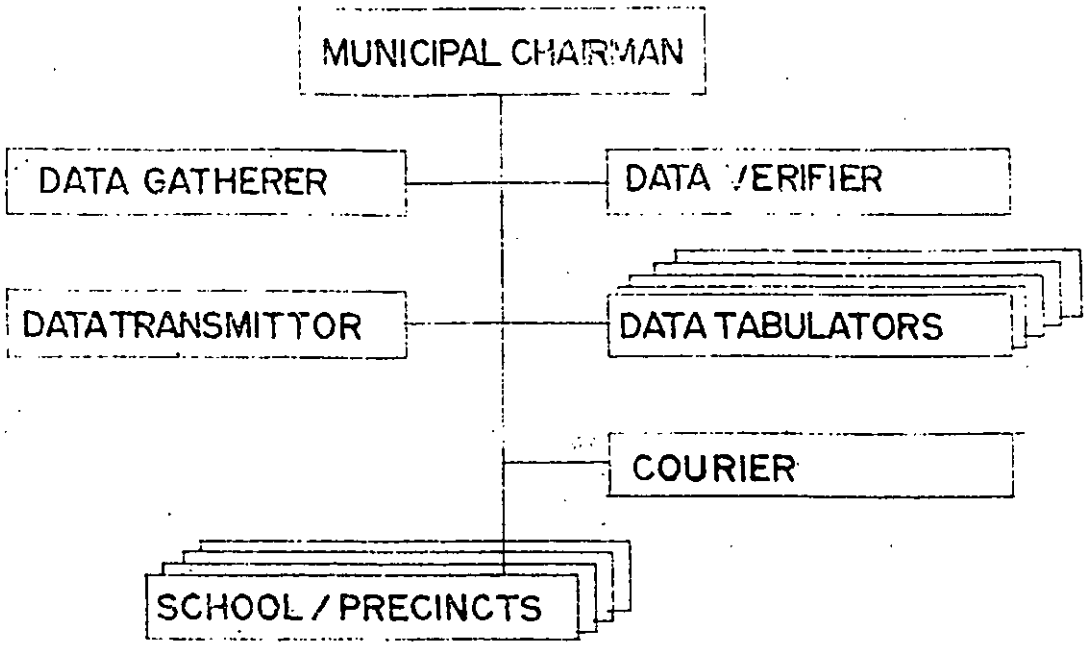

PHYSICAL LAY OUT FOR TABULATING NATIONAL CADIDATES

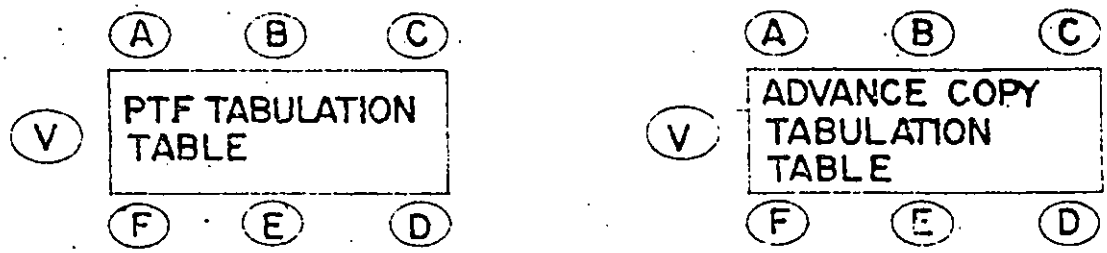

- TYPICAL TEAM FOR 50 PRECINCTS
- CITIZEN VOLUNTEERS TO COMPOSE THE TEAM
- MEDIA REPRESENTATIVES NOT REQUIRED BUT MAY ALSO BE MEMBERS.

ORGANIZATION OF TABULATION TEAM

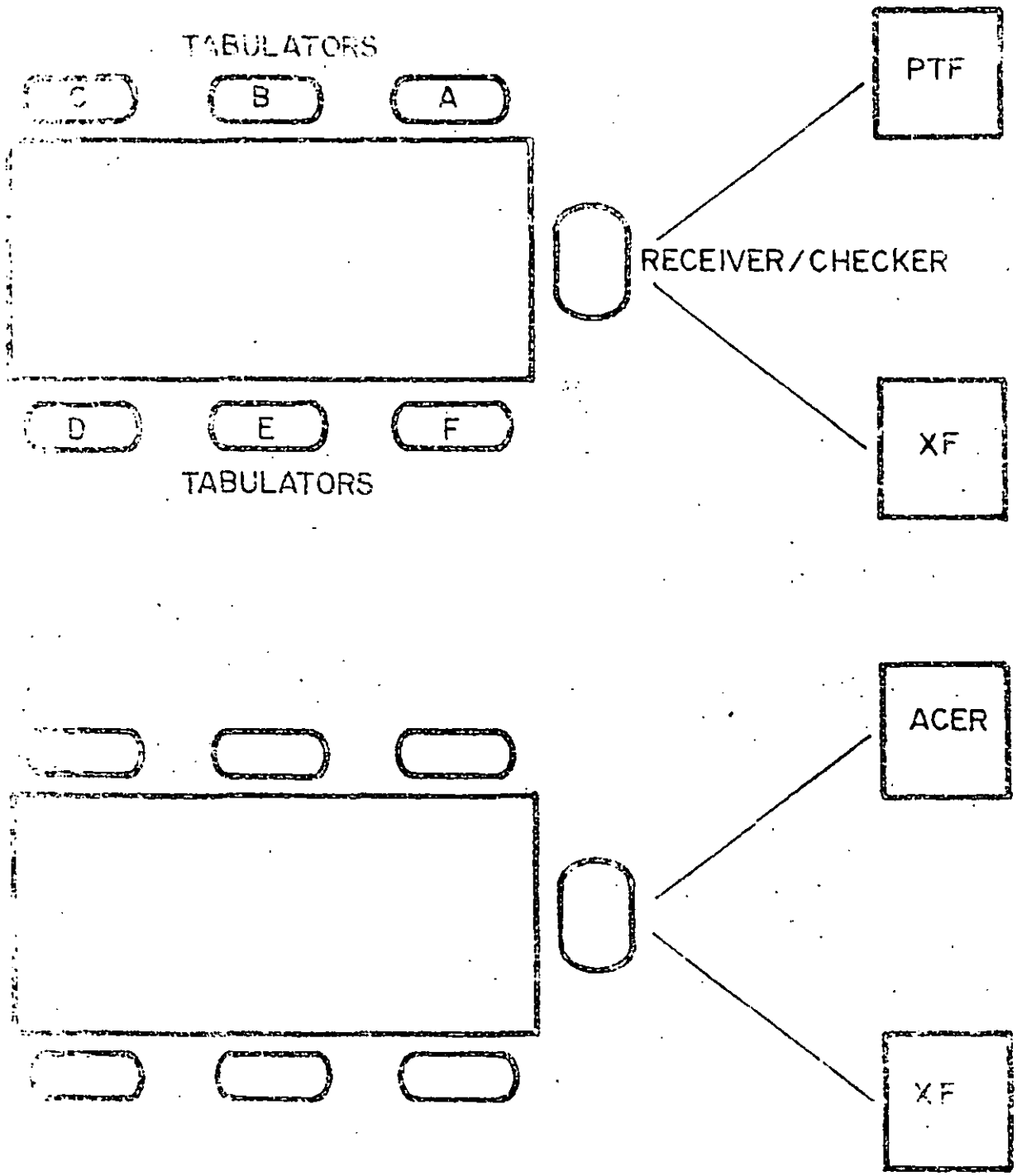

PROCEDURES FLOW CHART

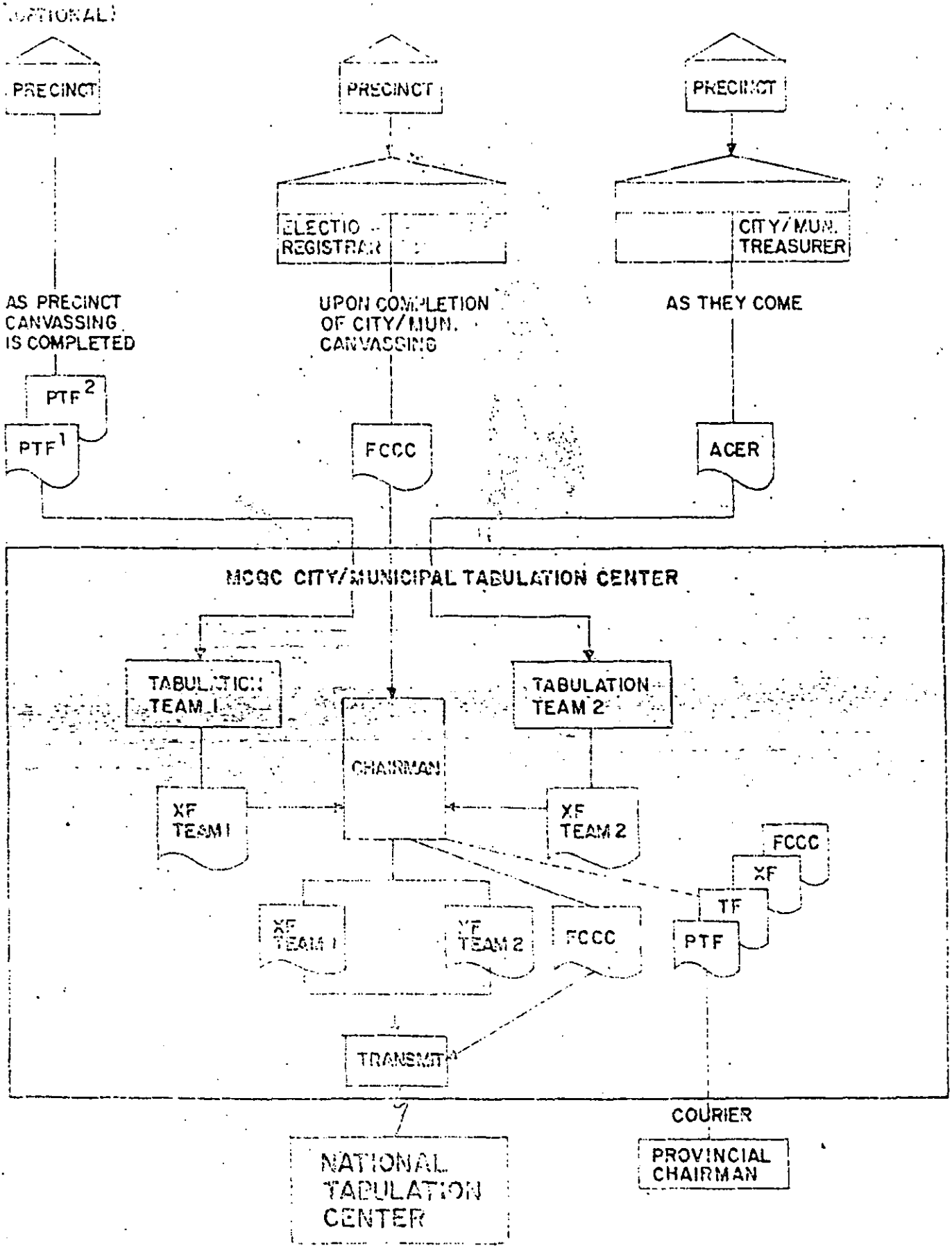

MEDIA CITIZENS QUICK COUNT

CIRCULAR NO. 3

A. In the interest of ensuring an efficient transmission of election results on May 11, 1992, the Media–Citizens Quick Count (MCQC) would like to receive specific inputs regarding the manner in which you intend to transmit the results to MCQC Headquarters in Manila.

We wish to stress, however, that in areas where fax machines are available, may we request you to now identify their possible use including the name of the firm/location and fax number. This is the most desirable method of transmitting results to the National Tabulation Center.

Telex and phone reporting should only be resorted to in the absence of fax transmission facilities because the former have proven to be more expensive and an inaccurate and inefficient form of transmission.

In certain municipalities where there are no telephone or telex facilities in place, please arrange for the use of existing facilities in a nearby municipality in order to ensure unhampered transmission of the results.

Kindly forward your inputs to our Headquarters at Caritas Manila, 2002 Jesus St., Pandacan, Manila.

/maan

				PLDT-DO	PLDT-SS	PLDS-PP	PLDT-PCO	PLDT-[illegible]	PLT-TLB
[illegible]	III	[illegible]	Santa Rosa		1	1			
417	III	Gonzales	Sta. Cruz		1	1			1
418	III	Aurora	BALER		1	1			1
419	III	Aurora	Casiguran						
420	III	Aurora	Dilasag						
421	III	Aurora	Dinalongan						
422	III	Aurora	Dingalan						
423	III	Aurora	Dipaculao						
424	III	Aurora	Maria Aurora						
425	III	Aurora	San Luis						
426	IV	Batangas	Balayan		1	1			1
427	IV	Batangas	Calaca						
428	IV	Batangas	Calatagan						
429	IV	Batangas	Lemery		1	1			1
430	IV	Batangas	Lian						
431	IV	Batangas	Nasugbu		1	1	1		
432	IV	Batangas	Taal						
433	IV	Batangas	Tuy						
434	IV	Batangas	Bauan		1	1			
435	IV	Batangas	Lobo						
436	IV	Batangas	Rabini						
437	IV	Batangas	San Luis						
438	IV	Batangas	San Pascual						
439	IV	Batangas	Tingloy						
440	IV	Batangas	BATANGAS CITY						1
441	IV	Batangas	Agoncillo						
442	IV	Batangas	Alitagtag						
443	IV	Batangas	Balete						
444	IV	Batangas	Cuenca						
445	IV	Batangas	Laurel						
446	IV	Batangas	Malvar						
447	IV	Batangas	Matasanakahoy						
448	IV	Batangas	San Nicolas						
449	IV	Batangas	Sta. Teresita						
450	IV	Batangas	Santo Tomas						
451	IV	Batangas	Talisay						
452	IV	Batangas	Tanauan		1	1			
453	IV	Batangas	Ibaan		1	1			
454	IV	Batangas	Padre Garcia						
455	IV	Batangas	Rosario						
456	IV	Batangas	San Jose		1	1			
457	IV	Batangas	San Juan		1	1			
458	IV	Batangas	Taysan						
459	IV	Batangas	LIPA CITY		1	1			1
460	IV	Cavite	Bacoor		1	1		1	
461	IV	Cavite	Kawit		1	1			
462	IV	Cavite	Noveleta		1	1			
463	IV	Cavite	Rosario		1	1			
464	IV	Cavite	CAVITE CITY		1	1			
465	IV	Cavite	Cavaona		1	1			
466	IV	Cavite	Dasmarinas		1	1	1		
467	IV	Cavite	Gen. Mariano Alvarez						
468	IV	Cavite	General Trias		1	1			
469	IV	Cavite	IMUS						
470	IV	Cavite	Tanza		1	1			
471	IV	Cavite	TRECE MARTIRES CITY		1	1			
472	IV	Cavite	Alfonso		1	1	1		
473	IV	Cavite	Amadeo		1	1	1		
474	IV	Cavite	General Aguinaldo						
475	IV	Cavite	Indang		1	1	1		
476	IV	Cavite	Magallanes		1	1	1		
			Mendez-Nuñez		1	1	1		

PEC-TLG	PTT-TLX	PEC-Box	PTT-FAX	RCPI	DIGITEL	PILTEL	ITELOG	HAMPC-TV	PRIVATE	ICC-SCAL	ICC-MITRO	ICC-FAX	REMARKS
				1									
				1									
1	1	1		1						1			
				1									
1	1	1	1	1 1									
				1									

MEDIA CITIZENS QUICK COUNT

CIRCULAR NO. 4

This circular contains COMELEC Resolution No. 92-0644 with regards to "city/municipal treasurer to allow access to the duly accredited representatives of MCQC to the advanced treasurer's copy of the election returns coming from the precincts."

The resolution specifically

a) directs the city/municipal treasurer to allow access

b) allows MCQC representatives to assist the city/municipal treasurer's personnel in tabulating election returns as soon as available.

c) allows MCQC to put up billboards to display results.

It is suggested that MCQC municipal chairmen contacts the municipal treasurer beforehand and lay the groundworks for a non-interrupted tabulation of the ACERs.

EXCERPT FROM THE MINUTES OF THE REGULAR MEETING
OF THE COMMISSION ON ELECTIONS EN BANC
HELD ON MARCH 18, 1992

Present:

Chairman Christian S. Monsod
Commissioner Haydee B. Yorac
Commissioner Dario C. Rama
Commissioner Regalado E. Maambong
Commissioner Vicente B. de Lima
Commissioner Remedios A. Salazar-Fernando

xxx xxx xxx

92-0644. In the matter of the memorandum dated March 11, 1992 from Honorable Commissioner Regalado E. Maambong re update on the Media-Citizens Quick Account,

"RESOLVED to approve the recommendations of Honorable Commissioner Regalado E. Maambong, to wit:

(1) to direct the city/municipal treasurer of every city and municipality to allow access to the duly-accredited representatives of MCQC to the advanced treasurer's copy of the election returns coming from the precincts.

(2) to allow MCQC representatives to assist the city/municipal treasurer's personnel in tabulating the votes of candidates reflected in the election returns as soon as they are available, and

(3) to allow MCQC, subject to the availability of funds, to put up the billboards to display the results of the elections in any city or municipality."

Let the Deputy Executive Director for Operations implement this resolution.

xxx xxx xxx

This is to certify that the foregoing is a true and correct excerpt of the Minutes of the Regular Meeting of the Commission on Elections en banc held on March 18, 1992.

LAMBERTO P. LLAMAS
Comelec Secretary

cc: Hon. Com. Regalado E. Maambong
The Acting Executive Director
The Deputy Executive Director for Operations

MEDIA CITIZENS QUICK COUNT

CIRCULAR NO. 5

As earlier communicated to all MCQC provincial and city chapters, our preferred mode of transmitting data from the municipalities and cities to the National Tabulation Center at La Salle Greenhills is by fax.

Accordingly, for security reasons, the NTC should be able to recognize the data transmittor and therefore ensure that the fax reports received at the NTC are coming from duly designated representatives of MCQC chapters.

In view thereof all provincial, city, and municipal MCQC chairmen are requested to submit the two (2) names with corresponding sample signatures directly to MCQC Secretariat at the following address:

Before May 5, 1992	–	MCQC Caritas Manila 2002 Jesus St. Pandacan, Manila
May 5, 1992 onwards	–	MCQC La Salle Greenhills San Juan, Metro Manila

/mmaa

The Manila Chronicle

Tuesday, May 19, 1992

Expresses trust in quick count

By Joey Caburnida
Staffmember

THE MILITARY establishment yesterday vowed to support whoever might be the next president and expressed confidence in the Media-Citizens Quick Count (MCQC), which has been accredited by the Commission on Elections to do a parallel, though unofficial, count of the national vote in the May 11 elections.

At the same time, Defense Secretary Renato de Villa allayed fears of any coup or serious civil disturbance arising from yet unsubstantiated complaints of election fraud by some candidates, particularly Miriam Defensor-Santiago.

Santiago, now trailing the presidential front-runner, administration candidate Fidel Ramos, has given loud indications she will not accept defeat.

General Lisandro Abadia, the armed forces chief of staff, reported that the military had received "raw" information that the rightwing Reform the Armed Forces Movement (RAM), held responsible for failed coup attempts, had sent "feelers" to Santiago's camp offering support.

But Abadia doubted the offer would be accepted, telling reporters at his headquarters in Camp Aguinaldo, "I believe that Mrs. Santiago's people are intelligent and sober enough not to allow themselves to be exploited by any group which will try to overthrow the government."

De Villa, who appeared in a separate news conference, also at Camp Aguinaldo, said there was "no concrete evidence yet" of any RAM overtures to Santiago's camp. In any case, he assured that it could not muster enough force to disrupt the transfer of power to the next government.

Santiago has complained that the MCQC count is being manipulated in favor of Ramos and threatened to lead protest actions similar to the People Power rising that had swept Mrs. Corazon Aquino against the authoritarian president, Ferdinand Marcos, in 1986.

De Villa said he saw no parallels between the two situations. "There's certainly no fear that we are about to embark on another street revolution. I think there's no reason for anyone to take a violent option."

He explained that any losing candidate could stage rallies so long as they were conducted "within the bounds of the democratic system."

"In the final analysis," he said, "all of these protests will ultimately be

Continued: Page 6

-om Page 1

itled by our courts."

Abadia revealed he had "touched se" with each of the seven presiden-l candidates "to appeal for calm and ·briety" and assure them that the med forces would serve whoever is proclaimed as president and their mmander in chief.

Abadia also asked the Comelec to low the MCQC to complete its ant. "I would recommend that the CQC count go down to the wire beuse I want to find out if the MCQC ly would match that of the Comelec d the joint congressional canvass-."

This, he explained, would once and for all dispel any doubt about the integrity of the count.

Also yesterday, Brig. Gen. Thelmo Cunanan, chief of the National Capital Region Defense Command (NCRDC), said at least 33 more dynamite sticks were recovered by his men at 3 p.m. Sunday from a National Power Corp. transmission tower in Camarin, Kalookan City, believed planted by rebel soldiers in a bid to create chaos.

In Malacañang, President Aquino expressed confidence that Congress would be able to proclaim her successor on May 25 and inaugurate the new government on June 30 as scheduled.

At a news conference at the Hotel Nikko-Manila Garden, Ramos also advised Mrs. Santiago to "act like a potential president" and denied "any wrongdoing" on the part of his party.

"Why should we resort to such monkey business when we are leading in the race," he said.

In another breath, Ramos hinted he might even offer "advisory" roles to some of his rivals if he won.

Meanwhile, Mrs. Santiago stepped up her campaign to gain public support for her cause by announcing she would ask the youth sector to join her in street rallies.

She said she was organizing a new youth group called the Newly Enfranchised Voters Organization to help her document cases of election irregularities.

"The culture of corruption manifests itself once more in the wholesale election fraud that is going on. The youth have already expressed support for this nationwide crusade. They are just waiting for schools to open in order to mobilize," she said in a statement.

She added: "The youth will never accept that I was No. 1 in all the opinion polls and the first five days of counting, and yet lose the presidency because of cheating."

She said her People's Reform Party would present to the Comelec tomorrow evidence of cheating using "case studies and statistical analysis by experts." With Gemma Tampus and Booma Cruz

The Manila Chronicle

Tuesday, May 19, 1992

No picnic at MCQC

TO A CYNIC like me, it is difficult to see what drives those young men and women volunteers at MCQC. They work under the worst possible conditions. The work area is oppressively warm. Terribly humid. A few minutes and you feel like you've been through a sauna. They have long stretches of waiting for the returns to come. Early evening hours also bring hordes of "May flies" that get into their hair, nose, mouth and food. And when it rained one evening, the roof of the La Salle gym provided little shelter.

To top it all, these people are doing it on their own time. Many have taken leaves of absence from their workplace to volunteer at MCQC. And they are not being paid for doing what they volunteered to do. They get their meals for free, but how much fast food can one take? This MCQC exercise will take another week.

The worst part of it is the vilification being thrown their way by candidates who happen to be losing, at least for the moment. It just isn't fair. These MCQC volunteers are doing a selfless sacrifice for the country. Surely, they would have better things to do than spend sleepless nights at the La Salle gym. And the weekends... they could be enjoyed with the family at the beach. But they are there. Think about it... if there was no MCQC, all hell might have broken loose by now.

It just isn't fair. The politicians who are casting doubts on the integrity of the MCQC simply do not know what they are talking about. As for the impatient citizens who deride MCQC as "the slow count" should look at other people to blame. MCQC tabulators can only work as fast as veritable returns are delivered to them. The intensity of the rivalries in the local level, including Metro Manila towns and cities, have slowed the count considerably.

Even the MCQC governing board deserve some notice too. Representing top leaders in industry and media, they sweat it out at the La Salle gym with the rest of the volunteers. They could be spending their time playing golf or even being abroad. But they are there, looking after the many details and things that constantly go wrong in an operation as big as MCQC.

Keeping a policy of transparency, the governing board hold their meetings not in private, but in full view of everyone present, including the representatives of the political parties. Somebody, a politician who happened to be losing in the count, complained about a secret room but there just isn't any such room at the La Salle gym.

Last Sunday night, I witnessed the arrival of the MCQC coordinator from Abra with the returns from the province. Her arrival was announced in the public address system and greeted by a warm applause. She told us a tale of life-threatening hardships, just trying to get her job done. All she will ever get for the effort is a psychic income that she had done her share for this country.

One lesson from these volunteers comes out clearly for me: this nation isn't as hopeless as the headlines seem to indicate. I often tell friends that if I were 10 years younger I would not hesitate to make a decision to abandon ship.

Yet, these people are 10, even 15 years younger than I and they have not lost hope. It warms your heart to look at them enthusiastically do what looks like an impossible and thankless job. They deserve our gratitude. Not the catcalls from politicians who are only after their own interests.

The Manila Chronicle

Thursday, May 20, 1992

EDITORIAL

Irresponsible charges against the MCQC

THE MEDIA Citizens Quick Count has earned a bad reputation it does not deserve.

Those who throw mud at the MCQC are inspired either by ill political motives or by utter ignorance. One political camp has seized on the early, statistically insignificant lead of its main candidate to proclaim an "irreversible trend." The unwarranted proclamation is a first step towards discrediting the canvass and opening an opportunity for extra-legal intervention into the electoral process. Fortunately, the seditious effort shows little sign of progressing.

The perceived "slowness" of the quick count has allowed irresponsible commentators to cast doubt on the integrity of the unofficial canvassing. Taking advantage of public anxieties and deficient public information about how the MCQC tally operates, certain parties have attempted, over the past few days, to aggravate an already volatile situation by insinuating that massive fraud is the cause of the delay.

The MCQC's only fault lies in its poor choice of self-description. The media-citizen volunteer group is actually engaged in a "parallel count" and not, strictly speaking, a "quick count."

The "quick counts" were those undertaken by a number of media organizations in the first 48 hours after polls closed last week. These "quick counts" took precinct-level tallies and added them up. While generally reliable, these "quick counts" unavoidably demonstrated an urban bias. The limitations of data transmission, with most of the facilities available only in the cities, skewed the early tabulations in favor of highly-urbanized centers.

The virtue of the "quick counts" is that they kept the public informed of voting outcomes during the first hours of counting where the possibility for confusion and explosive public anxieties is greatest.

Unlike the "quick counts" undertaken by a number of media organizations, the MCQC puts emphasis on accuracy over speed. The MCQC canvass is based on their copy of the municipal and city canvasses duly certified by the Board of Election Inspectors.

Given the basic documents required for the MCQC canvass, the rate of tabulation depends entirely on the completion of counting at the municipal/city level. Given the sheer number of local and national candidates vying in this elections, the slow pace of canvassing at the municipal level was expected. The pace was slowed down even more by protests among local candidates and long delays in the municipal canvassing.

Mandated to conduct a parallel count based on BEI-certified municipal canvassers, the MCQC cannot perform any faster than the count going on at the municipal level. Power shortages, outbursts of partisan passions in some towns and a deficient communications infrastructure all conspire against a more efficient national canvassing of an estimated 27 million ballots cast for over 80,000 candidates.

The MCQC, if the obvious has to be stressed, cannot possibly be a conspiracy. It is financed mostly by media organizations. While these media organizations may have their individual political preferences, the media community as a whole is interested, above all, in maintaining clean and honest elections.

The MCQC, furthermore, relies on the non-partisan support offered by hundreds of civic organizations and thousands of individual volunteers who are putting in millions of manhours monitoring the municipal canvassing, transmitting the results, cross-checking the numbers and verifying the sources of data before tabulation. It is massive, heroic effort of independent citizens interested in the integrity of the electoral process. This massive effort, relying on the goodwill and volunteerism of concerned Filipinos could hardly be described as a closed conspiracy of one political camp among so many.

In an effort as large as this one, for an election that has been described as an "administrative nightmare," we must allow for minor snags here and there.

The nation is best served by allowing both the parallel count of the MCQC and the official count of the Comelec to proceed with the least turbulence. Civic duty asks of every citizen maximum contribution towards the maintenance of the integrity of the electoral process.

Little is served by impugning the independent count on the basis of speculation. Those who are anxious about how the independent canvass is going should assume responsibility for finding out how it operates. They should not inflict their ignorance or their hysteria on an independent effort that is trying very hard to surmount logistical limitations.

PHILIPPINE DAILY
INQUIRER

ISSN 0116-2642 VOL. VII NO. 166

EUGENIA D. APOSTOL
Board Chairman
LETTY JIMENEZ-MAGSANOC
Acting Editor-in-Chief
ROSAURO G. ACOSTA
Editor

JOSE MA. D. NOLASCO
Managing Editor
ISAGANI YAMBOT
Associate Publisher
ARTEMIO T. ENGRACIA JR.
News Editor
ABELARDO S. ULANDAY
Associate Editor
NILO B. PAUROM
Assistant News Editor
PERGENTINO B. BANDAYREL, JR.
City Editor

FELIPE R. OLARTE
Advertising Manager
SAMUEL V. SEÑOREN
VP for Operations
RENATO R. REINOSO
VP for Marketing

The publisher, PHILIPPINE DAILY INQUIRER, INC., holds business and editorial offices at 1006 D. Romualdez st., Ermita, Manila; Mailing address: P.O. Box 2050, 1099 Manila, Philippines, Tel. Nos. 50-80-60 to 79 connecting all departments; Advertising: Tel. Nos. 855-578 and 865-742 (Makati); 922-7174 (Quezon City).

Editorial

Carry on, MCQC

THE beleaguered Media Citizens Quick Count, almost since Day One the target of both insinuations and accusations of questionable behavior, as well as the butt of heckling for its less-than-lightning-quick tabulation of the votes, finally got down to the nitty-gritty.

It admitted that there may be padding of results in the presidential race, and formally asked the Commission on Elections to investigate reports that some municipal and provincial canvassers may have tampered with election returns.

That's quite a heavy load the MCQC has been carrying, from the publishers who compose the majority of its governing council down to the young and bright-eyed volunteers who have had to endure, not only the stink of unflushed toilets, but also, and most importantly, aspersions on the purity of their intentions, to speak nothing of the possibility of fraud staining their efforts.

For young people who have yet to comprehend the twists and turns of *realpolitik* and the truth of the dictum that more often than not there is no justice in this world, the last one's a major blow.

But we have to hand it to the MCQC for taking up the enterprise of a parallel count, given how the group has become as a punching bag in a gym filled with combative boxers. What doubles its burden, however, is this: Because the media play a significant -- some say dominant -- part in it, rightly or wrongly media's credibility has been laid on the line.

Unfair? Well, that's the way it goes.

Having set itself up as a nonpartisan bloc that would engage in a quick tabulation of votes, the slow trickle of election returns has led the MCQC to be charged, for example, with "trending," and therefore bias, in favor of whoever the winning candidate may be at a given moment.

And now this admission, not of fraud, but the *possibility* of fraud.

In the days immediately following the May 11 polls, there was such a euphoria over this country having pulled off a clean and peaceful election, this country so hungry for achievements on which to congratulate itself.

But quickly came information that it wasn't all that "clean" nor all that "peaceful." As a member of an international observers mission put it, if "clean" were to be used in the absolute sense, then it was not a clean election.

Then again, it would be hard to imagine how it could possibly have been clean, if we are to take the perspective of, not the disenchanted, but the realist. Or the cynic who, having (correctly) noted that the system is hardly different from the way it was in the bad old days, proceeded to let election day go by without budging from his house, convinced that it's all over, *including* the counting.

But that is not our view. Our view is that the MCQC should carry on with the canvassing of votes based on the "good certificates of canvass" that it has. The Comelec, according to the MCQC's urgent request, will have to investigate the "isolated certificates of canvass covering a few precincts in Misamis Oriental and Lanao del Sur."

Let us make this point: The discovery of apparent fraud is hardly surprising in a do-or-die, down-to-the-wire contest where partisanship deals the most telling blows.

This is the context within which the MCQC is called upon to operate. This is why someone like MCQC volunteer Gerry Tanas could so easily lose his life to an assassin under the Nueva Vizcaya stars.

Let us take the point further: All this is merely fallout from the highly partisan behavior of this administration, which, instead of holding itself above the fray, waded right in and pulled out all the stops.

Manila Standard

Vol. V(No.) Philippines, Friday, June 5, 1992 28 Pages

Chavez quit suspends senatorial proclamation

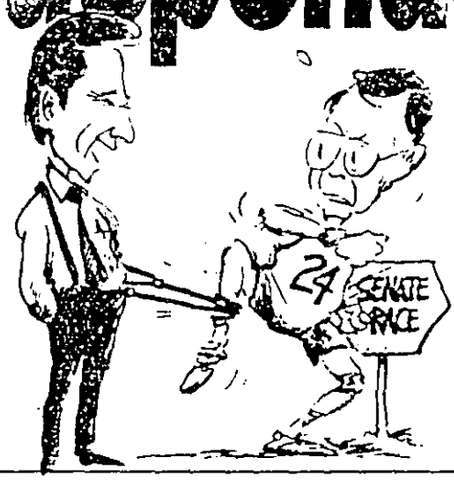

Page 2

(BOBBY CABRERA)

A job well done

For all the brickbats thrown the Media-Citizens Quick Count's way, it earned plaudits from the Rotary Club of Manila. In photo Rotary Club of Manila president Frankie Roman hands MCQC executive director Ed Nuque and MCQC vice chairman Raul Locsin a plaque citing the organization for its key role in the holding of clean and honest elections last May 11 despite tremendous logistical problems and communication faults. The MCQC effort was anchored on volunteers from the youth and other civic groups. Looking on at right is Commission on Elections chairman Christian Monsod.

Zobel bares Marcos offer to return billions of dollars *Page 2*

Farinas surrenders, then is released by court *Page 4*

Aquino declares three areas under state of calamity *Page 6*

UNION tell

Easy access to instant cash

MOBILIZATION CYCLE

REGIONAL MEETINGS	WEEK 1
PROVINCIAL MEETINGS	2
PROVINCIAL ASSEMBLY	3
MUNICIPAL MEETINGS	4
MUNICIPAL ASSEMBLY	5
SCHOOL MEETINGS	6
SCHOOL ASSEMBLY	7

POLLWATCHING AND MEDIA CITIZENS QUICK COUNT MOBILIZATION

NASSA NAMFREL CIMPEL /ETC PPCRV PPI CH 2/7 KBP

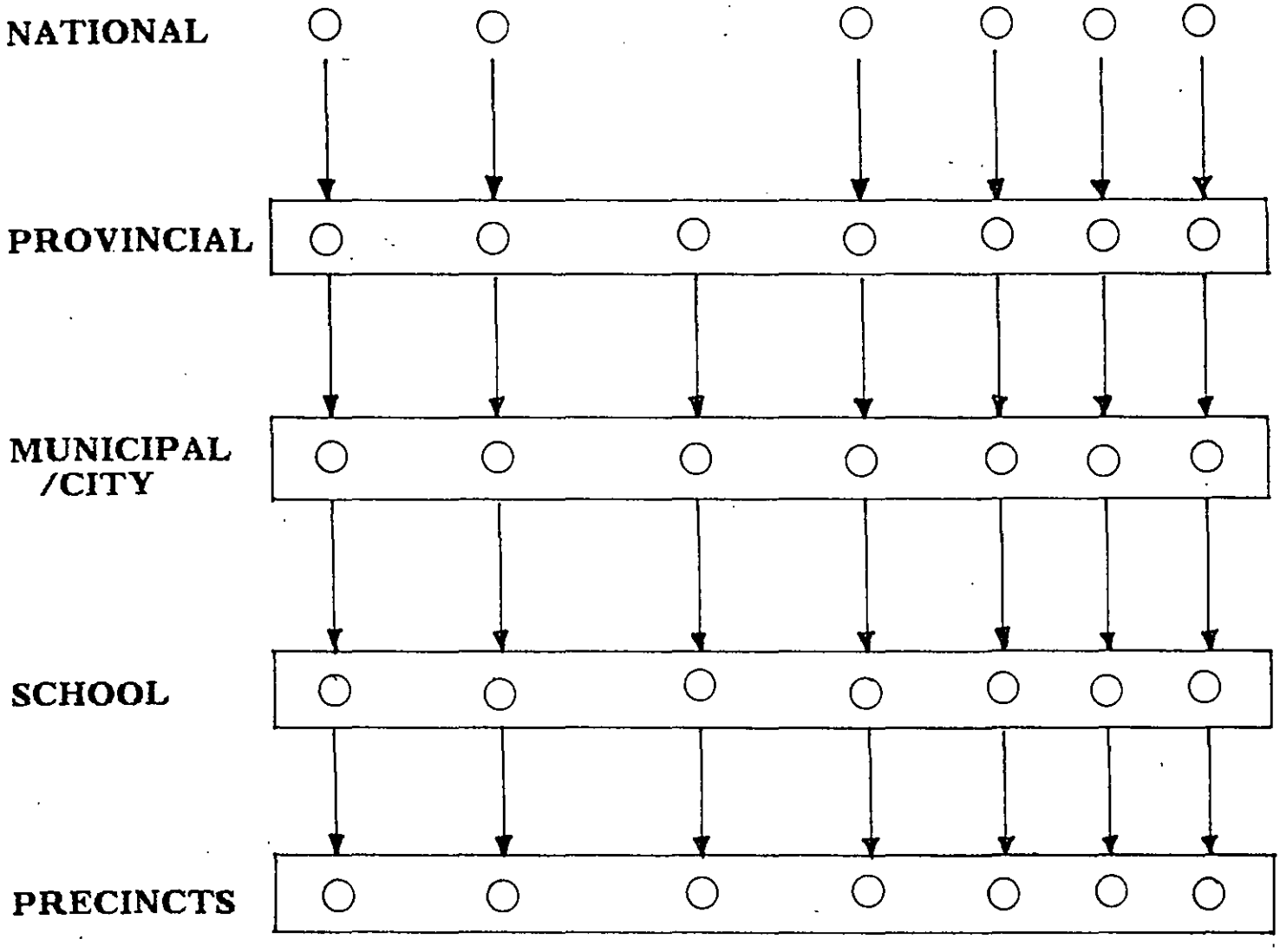

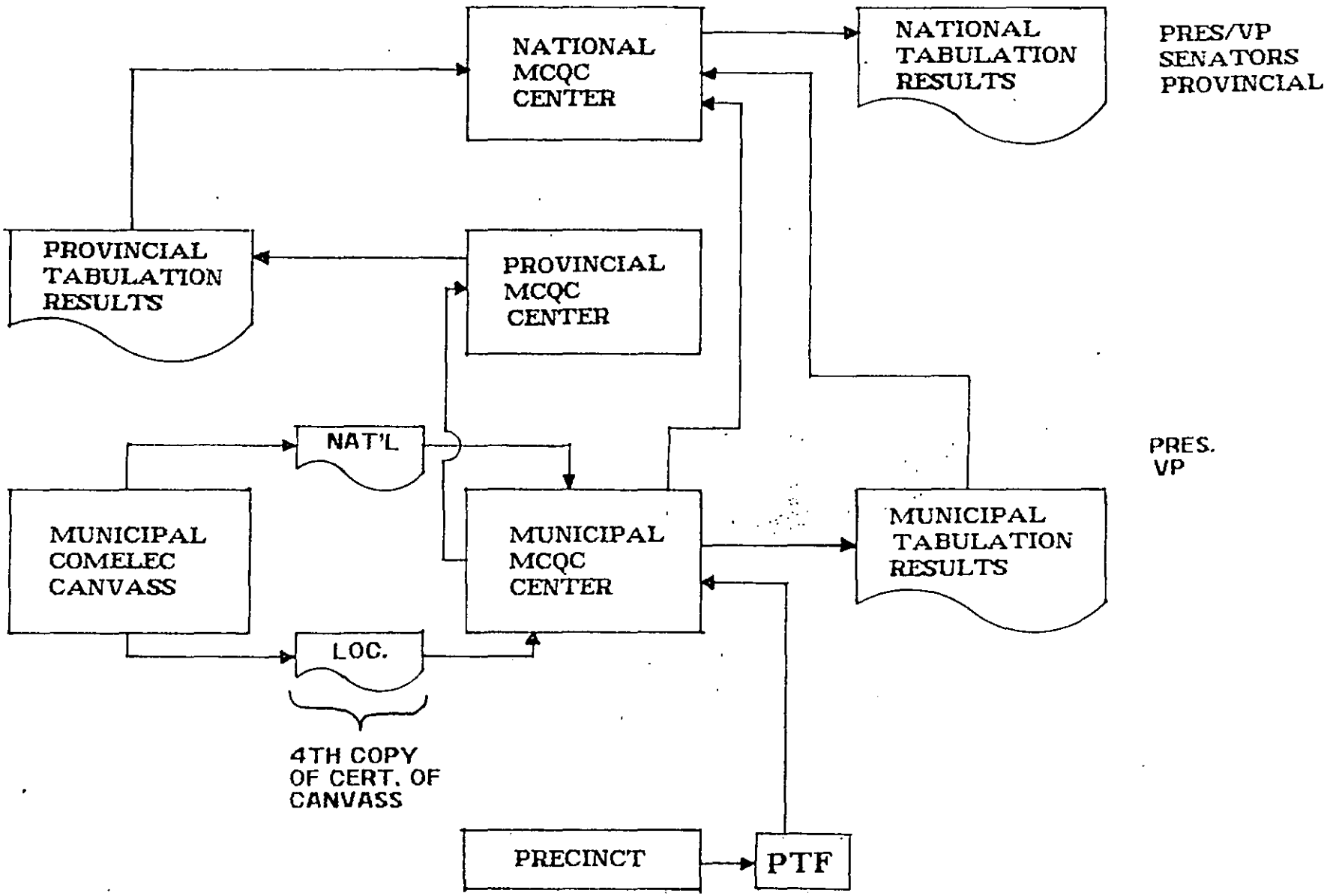
NATIONAL MCQC CENTER
NATIONAL TABULATION RESULTS
PRES/VP SENATORS PROVINCIAL
PROVINCIAL TABULATION RESULTS
PROVINCIAL MCQC CENTER
NAT'L
PRES. VP
MUNICIPAL COMELEC CANVASS
MUNICIPAL MCQC CENTER
MUNICIPAL TABULATION RESULTS
LOC.
4TH COPY OF CERT. OF CANVASS
PRECINCT
PTF

MEDIA CITIZENS QUICK COUNT
MANPOWER REQUIREMENTS

		MINIMUM PER CHAPTER	MINIMUM NATIONWI
PROVINCIAL OR CITY LEVEL		4/PROVINCE	500
	* PROVINCIAL CHAIRMAN		
	* CO-CHAIRMAN/DATA TRANSMITTER		
	* DATA VERIFIER/CANVASSER		
	* DATA TABULATOR		
MUNICIPAL LEVEL		4/MUNICIPALITY	6,000
	* MUNICIPAL CHAIRMAN		
	* CO-CHAIRMAN/DATA TRANSMITTER (TO TRANSMIT BOTH MUNICIPAL TABULATION OF PTFs AND 4th COPY OF CERTIFICATION OF CANVASS)		
	* DATA TABULATORS		
	* DATA VERIFIER/CANVASSER		
SCHOOL/PRECINCT LEVEL		1/PRECINCT	165,000
	* SCHOOL COORDINATOR (COMPILES PTFs, VERIFIES, AND SUBMITS PTFs TO MUNICIPAL CHAIRMAN IN BATCHES)	1/SCHOOL	
	* COURIER	1/SCHOOL	
	* PRECINCT CANVASSER (COPIES RETURNS BY PRECINCT ON PTF's, GETS BEI AUTHENTICATION, AND SUBMITS PTFs TO SCHOOL COORDINATOR)	1/PRECINCT	

Inside the Media Citizens Quick Count

By Ricky Gonzalez

THE Media Citizens Quick Count was tasked by the Filipino people under the new election code to conduct a parallel quick count for the elections of 1992. The MCQC was a non-partisan and civic-spirited volunteer operation. Each participant joined on his or her own free time. While volunteers had their own voting preferences, this ended after they cast their votes on May 11, 1992. Inside the tabulation center, we had one goal, to correctly count the vote and give this to the Filipino nation.

This is an account on how the computer operations came about, what problems were encountered and how these were solved, as well as recommendations for the next group of volunteers.

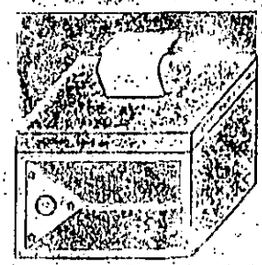

TABLE 1. CONFIGURATION OF EQUIPMENT

NATIONAL SERVER (MS)
Porro 486 33-MHz with 16 MB memory
Mylex Caching Controller with Seagate ST4766N (600 MB) drive
1.44 3.5 inch and 1.2 5.25 floppy drive
NTC VGA monitor with 512 KB VGA card
3COM Etherlink II card
Maxpeed SH-4U serial controller with 4 MaxStation
Wangtek 5150PK tape drive
HP IIIsi 16 ppm laser printer
Merlin-Gerlin SX3000 3KVA UPS

REGIONAL SERVER
SS1
Arche 486/33 with 16 MB memory
DPT Smart Cache ESDI controller with 2.5 mb cache and
Seagate ST4766E (600 MB) drive
1.44 3.5 inch and 1.2 5.25 floppy drive
Arche monochrome monitor with card
3COM Etherlink II card
Maxpeed SS-16 16 port intelligent serial card
Wangtek 5150PK tape drive
Epson LQ-1050+

SS2
Informtech 386/33-MHz with 8 MB memory
1.44 3.5 inch and 1.2 5.25 floppy drive
DPT Smart Cache + SCSI controller with 2.5 MB cache and
Seagate ST1480N (400 MB) drive
AOC monochrome monitor with card
3COM Etherlink II card
Maxpeed SS-8 8 port intelligent serial card
Epson FX-1050
Minute Man 600VA UPS

SS3
Imagineering Ultra 386/33 with 8 MB memory
WD 1007-WA2 ESDI controller with two Seagate ST4182E (150 MB) drive
1.44 3.5 inch and 1.2 5.25 floppy drive
AOC monochrome monitor with card
3COM Etherlink II card
Maxpeed SS-8 8 port intelligent serial card
Star XR1500
Minuteman 600VA UPS

SS4
ALR PowerPro 486 with 16 MB
On board IDE controller with two Seagate ST3244 (120 MB) drive
1.44 3.5 inch and 1.2 5.25 floppy drive
AOC monochrome monitor with card
3COM Etherlink II card
Maxpeed SS-16 16 port intelligent serial card
Epson FX-1000
Minuteman 600VA UPS

MSI (Backup National Server)
Informtech 386/33 with 8 MB memory
DPT Smart Cache + SCSI caching controller with Seagate
ST1480N (400 MB) drive
Two 1.2 5.25 floppy drive
Monochrome monitor with card
3COM Etherlink II card
Longshine LCS-8880 4 port serial card
Wangtek 5150PK 250MB cartridge tape drive

PRINT SERVER
PSI
Mitac 486/33 with 16 MB memory
Adaptec 1740 SCSI controller
Maxtor XT8760 (600 MB)
SCSI drive
1.44 3.5 inch and 1.2 5.25 floppy drive
3COM Etherlink II card
Archive Viper 250 MB tape drive
OTC 2160 800 lpm line printer

WORKSTATIONS
XT or 286 system with 1 MB memory
1 5.25 360KB floppy drive
RS-232 serial card
Monochrome or CGA card with monitor
Dejavu TSR terminal emulation software

DISPLAY SYSTEMS
XT with 640 KB memory
1 5.25 360kb floppy drive
CGA card at 40 column mode with monitor
Sharp 29V-G11 color television

OPERATING SYSTEM
SCO Unix system V version 3.2.2
TCP/IP version 1.1 network protocol

DATABASE ENGINE
Informix - Online
Informix - SQL
Informix - 4GL

PURPOSE

The MCQC had the following objectives:

- To provide a secure and reliable computer system, in order to tabulate the votes of the Presidential, Vice Presidential, and Senatorial candidates;
- To disseminate the tallies in a fast and orderly manner;
- To provide data to the political parties when requested; and
- To be open for scrutiny and checks from all interested parties.

The original plan called for equipment with the following specifications:

9 regional servers (80386-based PCs, 33-MHz or better with):
4MB of main memory
60MB of hard disk storage
8 workstations
1 132-column printer
1 national server (80386-based PC, 33 MHz or better) with
4MB of main memory
60MB of hard disk storage
1 laser printer

The system was to run under Unix with TCP/IP extensions. The application software would run under Informix.

The revised configuration was:

4 regional servers (80386-based PCs, 33-MHz or better) with minimum of 8MB main memory
minimum 400MB of hard disk storage
8 workstations
1 132-column printer
20-minute UPS on standby
1 80486-class national server with
16MB of main memory
700MB of hard disk storage
4 workstations including console
1 laser printer
20-minute UPS on standby

The original specifications were not followed for the following reasons:

a. We could not source 9 or 10 multi-serial cards, the vendors could only promise 4 or 5.

b. The vendor of the Unix variant could not supply 9 distinct copies of the operating software, without MCQC having to pay for it.

c. We could not find a supplier that could lend 9 distinct copies of TCP/IP. You need different serial numbers of TCP/IP for them to work in a network environment.

d. Availability of workstations. With XTs out of the market for a quite a while, some of our workstations were 286s. Vendors were not about to supply us with 72 units.

e. I felt that with nine servers and with the slow arrival of tabulation results, most of the equipment would be running idle.

f. Because we reduced the number of servers, the disk storage capacity had to be increased. Calculations showed that 240MB was sufficient. To be safe, we placed a minimum of 400MB.

g. 4 megabytes of main memory was insufficient. Unix needed 4MB, Informix needed 4MB, TCP/IP needed 2MB, and another 2MB was needed for swap space. This totaled 12MB. We bumped up the specification to a minimum of 16MB on the regional servers and 16MB for the national servers.

The final configuration of the MCQC computers is shown in Table 1.

INFORMATION FLOW/PROCEDURE

Reception of Data. Three types of data were received by MCQC. These were:

- PTFs (Precinct Tally Forms), sent by MCQC volunteers in the field. PTFs are complete tallies from the precinct level.
- ACER (advance copies of election return) completed tally forms from the municipal level.
- COC (Certificates of Canvas) from the provincial level and highly urbanized locations. A copy of the COC was designated for MCQC under the election law. Copies of the same COC were used for the Comelec Senatorial canvass and for the National Board of Tabulation for the presidential and vice presidential tallies.

Data came in by fax, telex, radio, and telephone, or was hand-carried. Security in the form of passwords, signature verification, and other means ensured that the data we received came only from authorized persons. When XF (transmission forms) or tally forms were delayed, MCQC sent flying squads to retrieve the information from the source. There were instances when MCQC dispatched people to the province by car, boat, airplane, or helicopter to fetch the documents.

Once the data was received, it was photocopied several times and distributed to the next step of the operation, which was validation.

Human validation. The forms were then checked for validity. Signatures were verified to make sure the data came from reliable sources. An area code – derived from the Pag-IBIG area code – was tagged on each form.

The forms were checked for legibility. Common errors encountered were 7 for 1, 9 for 7, etc. We checked to make sure that the total tally of votes did not exceed the number of

Continued on page 16

About the Author

The author, Ricardo Gonzalez, is vice president for customer support at Hypertech Corporation. During the MCQC, he was in charge of installing and running the quick count network.

FAMAS/400 ...
A FINANCIAL SYSTEM

Inside the Media Citizens Quick Count

Continued from page 14

votes cast. If the forms were invalid, a request was made to resend the document. In the few instances where we rejected the forms, the errors were caused by fatigue, garbled transmission, and sometimes, carelessness.

Each form was cataloged to make sure double entries did not occur. Once a form passed all these checks, it was sent to the encoding section for entry into the tabulation system.

Data entry and reconciliation. Every regional server was designated to serve a set of regions and/or urbanized locations. A copy of the XF was logged in folders by region. A copy of the form was given to two encoders and they proceeded to enter the data into the system separately. Only numeric inputs were used, since the data entry screens were patterned after XFs. The data entry program validated the data, according to the number of votes cast, if a previous form was entered, etc.

A reconciliation program was then run by another person to check the differences between the two sets of entered data. Once the data were determined, to be good, they were then posted to the system. A printout was generated and attached to the original form. The form plus the computer-generated printout were then attached to the original form. The form plus the computer-generated printout were then archived. This procedure was repeated every time a new set of XFs came in.

Consolidation in main server. Four hours before every scheduled release, data entry in each regional server was stopped, while each regional server transmitted new, verified data to the national server. This was done using Unix rcp (remote copy utility). Transmission went through an Ethernet backbone. Transmission rates varied depending upon the size of the file. Once the new data was transmitted to the national server, data entry on the regional servers could proceed.

A consolidation program was run on the national server. This program tabulated the results based on the incoming data. This program ran for at least two hours, since it had to figure out the results of seven presidential candidates, seven vice-presidential candidates, and over 160 senatorial bets. Each candidate's results were categorized at the regional level.

Printout. After consolidation, a print program was run to generate the results. Before the release was issued to the public, it was again checked manually for errors. The current release was compared to previous ones to make sure all the votes were accounted for.

Posting for public and press. We generated the results for the presidential, VP, senatorial, top 10 senators, and percentage of precincts tallied on the Unix system. This was then transferred to DOS-readable diskettes by using Unix's doscp facility. Using XTs configured for 40-column operation, the result was posted on nine 29-inch television sets in the public gallery.

Copies of the release were photocopied and distributed to the various interested parties. An analysis of the result was also provided by a separate standalone, Lotus-based system, with data coming from the Unix system.

At the request of political parties, additional data was provided. Requests were on a first come first serve basis, and had to be approved by Mr. Gus Lagman, in consultation with the systems group.

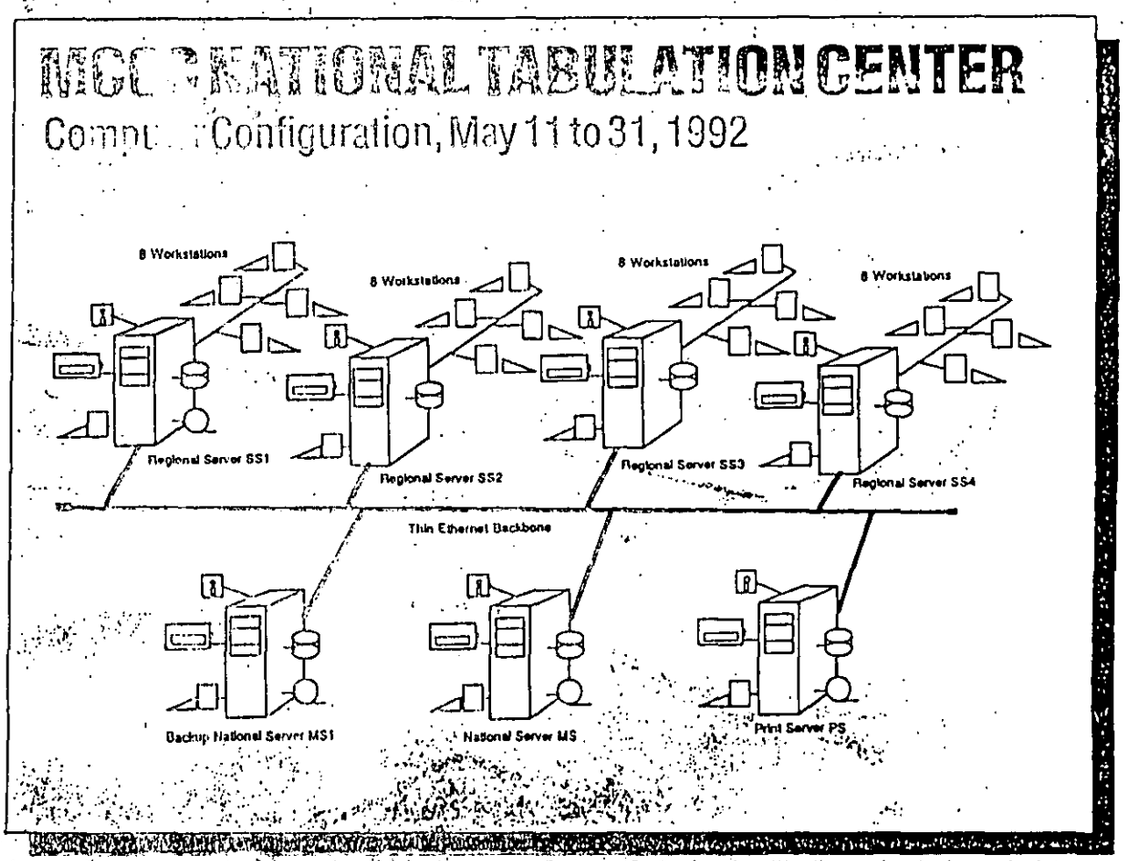

> We had to make the system work the first time around. We had different vendors supplying equipment and this was the first time we were going to integrate a big system in such a short time.

INTEGRATION AND INSTALLATION

We had to make the system work the first time around. We had different vendors supplying equipment and this was the first time we were going to integrate a big system in such a short time. To ensure a more than fair chance of success, we undertook the following steps:

Consultation with the application/system group. We talked to the CIS group well before integration day. We discussed with them memory, disk, passwords, definition of file systems, and network requirements. We also had to make sure that we were using the same version of Unix or one as identical as possible.

A major concern was the terminal emulation program to be used on the PCs. Because most of the workstations were from different sources, they would probably have a CGA or a monochrome card installed. This type of setup would only support single screen ANSI or TTY emulation only, preventing windowing and other block screen functions. This was resolved by using the Dejavu emulation program in ANSI-25 line mode.

Making the system identical as possible. Armed with the information from the systems and applications group, we then proceed to draft the final specification with compatibility foremost in our minds. Since, this was going to be a one-shot deal, we had to use familiar equipment.

We standardized on disk drives and controllers as much as possible. Only the combinations that we had previously tested on Unix were installed on the machines. Wangtek 5150PK with QIC-02 interfaces were used, since these were directly supported by the operating system. Multi-serial cards were another main concern, since a number of cards could not work with 16MB of main memory installed. We choose to go with Maxpeed, because a number of them were available and the product was designed with Unix in mind.

Pretesting. Once the equipment was sourced out and the specifications clearly defined, we proceed to build each server individually. The drives were prepared and loaded with Unix. We added the tape drive, serial ports, and Ethernet cards separately. We tested each new addition thoroughly before adding a new one. This allowed us to backtrack easily to determine where our installation failed. This was a much better alternative than putting all the peripherals in all at once. The only system untested was the Ethernet back-

Continued on page 18

FAMAS/400
A HUMAN RESOURCE
MANAGEMENT SYSTEM